mm [inch]

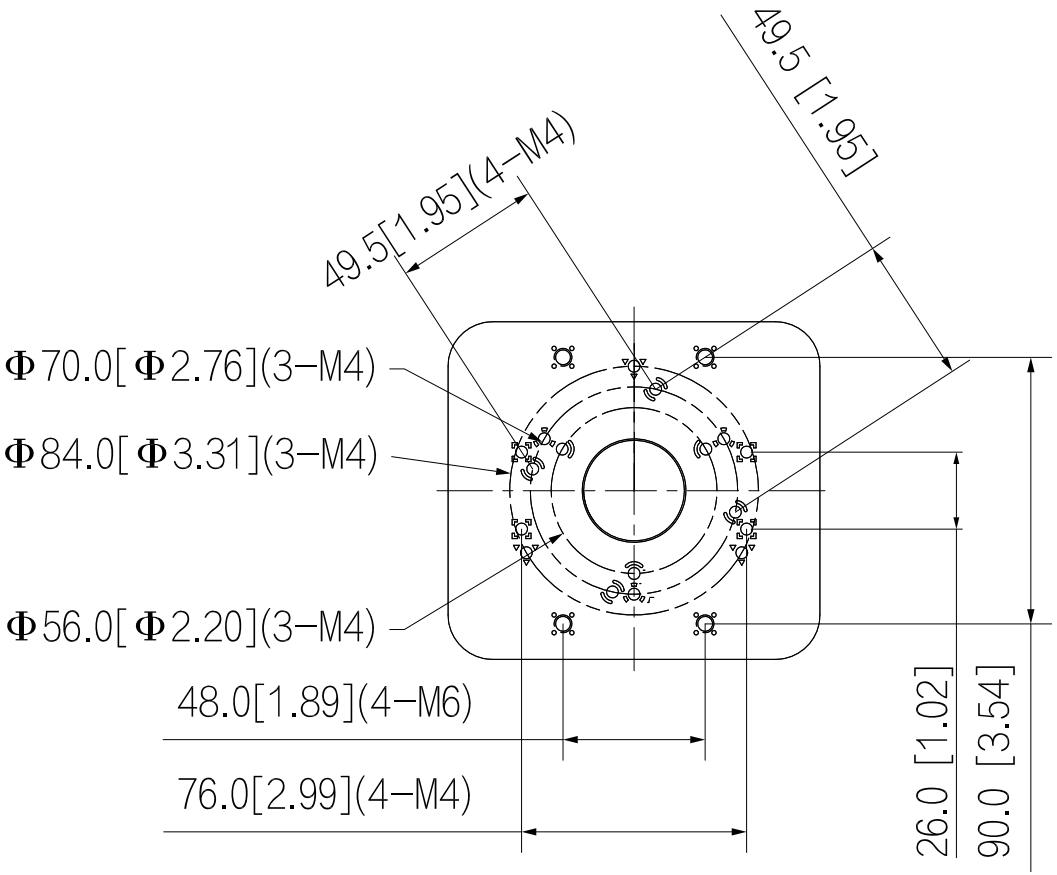
49.5 [1.95]
49.5[1.95](4-M4)
Φ70.0[Φ2.76](3-M4)
Φ84.0[Φ3.31](3-M4)
Φ56.0[Φ2.20](3-M4)
48.0[1.89](4-M6)
76.0[2.99](4-M4)
26.0 [1.02]
90.0 [3.54]

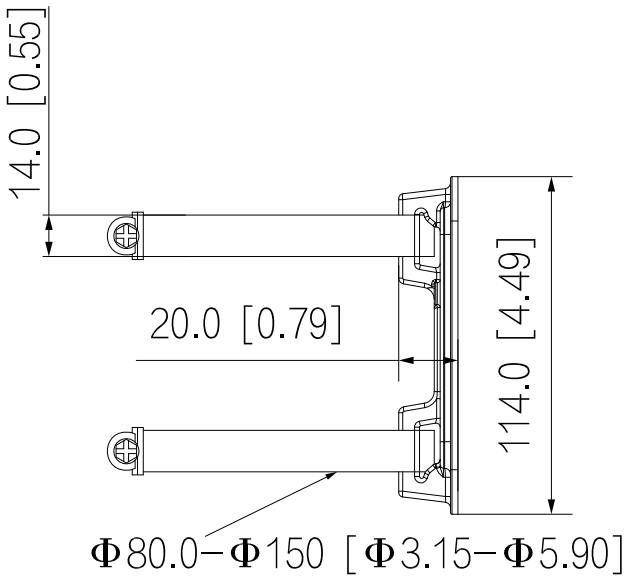
14.0 [0.55]
20.0 [0.79]
114.0 [4.49]
Φ80.0-Φ150 [Φ3.15-Φ5.90]

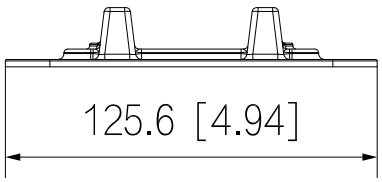
125.6 [4.94]